ambiance bain

C084V1.1 UK

WCWH2050/WCWH3350

When using a wall hung frame it is necessary to reposition the fascia fixing clips. Please follow the instructions below.

1. ADJUST THE HEIGHT OF THE STRUCTURE

(recommended height = 805mm)

IT IS NECESSARY TO LINE PUSH BUTTON FROM CISTERN TO PRE-DRILLED HOLS ON TOP WC FASCIA

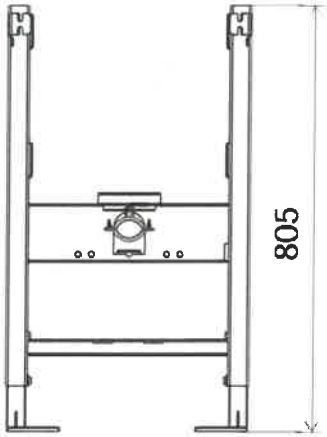

2. MOVE THE CLIPS FROM THE CARCASE TO THE FRAME

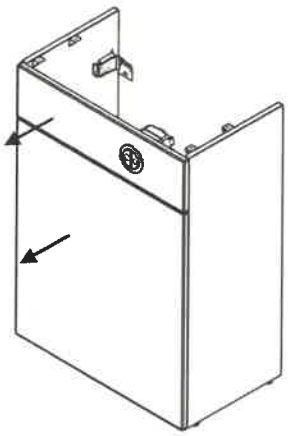

1 . Remove all fascias

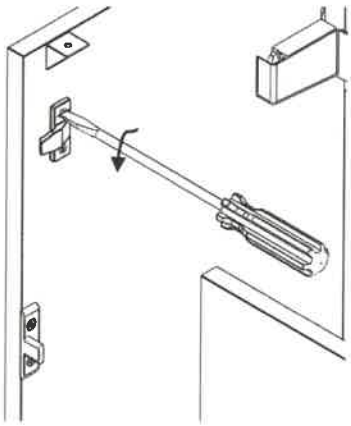

2 . Loosen the clips off the carcase

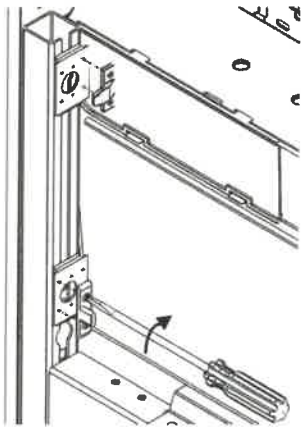

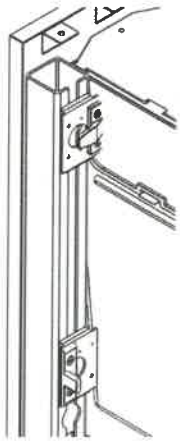

3 . Refix the clips from the carcase onto the frame

3. MOVE THE CLIPS FROM THE FASCIAS TO THE PREDRILLED FRAME LOCATIONS

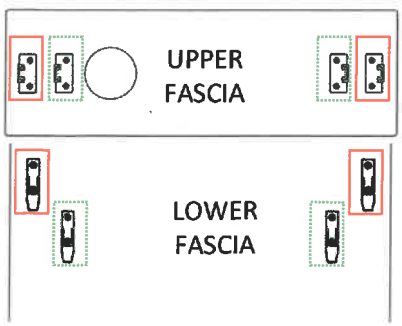

Delivery position

Frame position

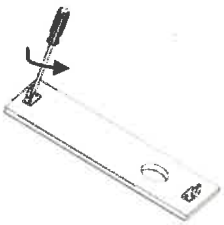

1 . Loosen the clips off the fascias

2 . Refix the clips to the new locations
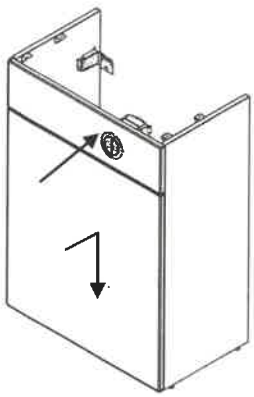
4. REFIT ALL FASCIAS